IZTECH – Department of Electrical and Electronics Engineering

EE313 – ELECTRONICS II

HOMEWORK 1 REPORT

WIEN BRIDGE & SCHMITT TRIGGER OSCILLATORS

Name: Zekiye Ayperi TATAR

Number: 310206043

Submission Date: 29.12.2025

PART I – WIEN BRIDGE OSCILLATOR

Objective

Designing a Wien Bridge oscillator that satisfies the given conditions, deriving oscillation frequency and oscillation criterion, simulating the circuit and observing the relationship between oscillation frequency and resistance.

Method

The circuit was observed, and the series and parallel connections were determined for finding the series impedance Z_s and parallel impedance Z_p – which were then written in terms of resistances and capacitances. The positive feedback factor $\beta(j\omega_0)$ was written in terms of the impedances and necessary operations were made.

Barkhausen criterion phase condition was used to make the observations that led to finding the equation for the oscillation frequency f_0. The values of resistors R_1 and R_2 were found by assuming R_1 and R_2 to be equal and putting the given values. By using the magnitude condition of the Barkhausen criterion, the amplifier gain $A(j\omega_0)$ was written in terms of $\beta(j\omega_0)$ – which was then simplified to find the required gain for oscillation, also known as the oscillation criteria. By equalling the gain formula for the amplifier to the required gain, and using the given R_4 value, the resistance value of R_3 was found.

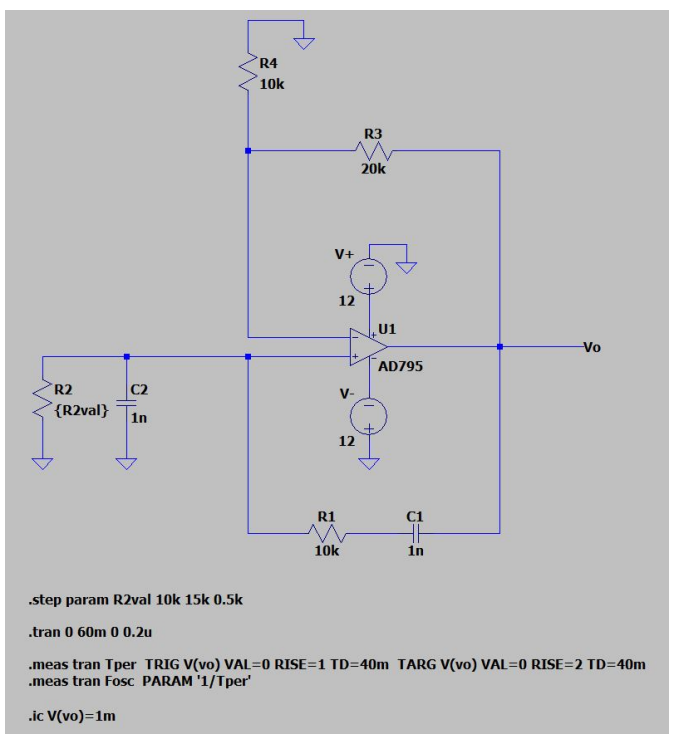

Figure 1: The schematic used for part 1

The schematic in Figure 1 was driven in LTspice by using the information given in the question and values found in the calculations. The SPICE directives used in the simulation and their purpose can be explained as:

- **.step param R2val 10k 15k 0.5k:** Tells LTspice to run the simulation multiple times for the values of parameter named 'R2val', ranging from 10kΩ to 15kΩ with 0.5kΩ increments. The range was chosen to observe the comparison between measured and calculated values of oscillation frequency much more relatively, since there is oscillation happening in all values in the selected range.
- **.tran 0 60m 0 0.2u:** Time-domain analysis command with 60ms of simulation time and maximum timestep of 0.2μs for ensuring multiple points per cycle which gives a clean waveform.
- **.meas tran Tper TRIG V(vo) VAL=0 RISE=1 TD=40m TARG V(vo) VAL=0 RISE=2 TD=40m:** Measurement command that measures the time difference between two events to get the oscillation period T from the waveform. TRIG event is the first rising crossing of V(vo) measurement through 0V detection point after 40ms time delay, while TARG event is the second rising crossing with the same conditions as TRIG. Time delay ensures the steady-state measurement.
- **.meas tran Fosc PARAM '1/Tper':** Measurement command that computes the oscillation frequency from the previously measured oscillation period.
- **.ic V(vo)=1m:** Initial condition command that sets the value V(vo) at t=0 to 1mV. By adding an initial voltage, a disturbance is provided to make sure that for every step, the oscillation starts reliably.

After the SPICE directives were defined and the simulation was run with the observed value being V(vo), the 'SPICE Error Log' was opened to see the results of simulation, where a table with oscillation frequency for every step was written. The gathered data was put in a MATLAB code that plotted the calculated and measured frequency values on the same place for comparison and calculated the percentage error for each resistance value.

Calculations

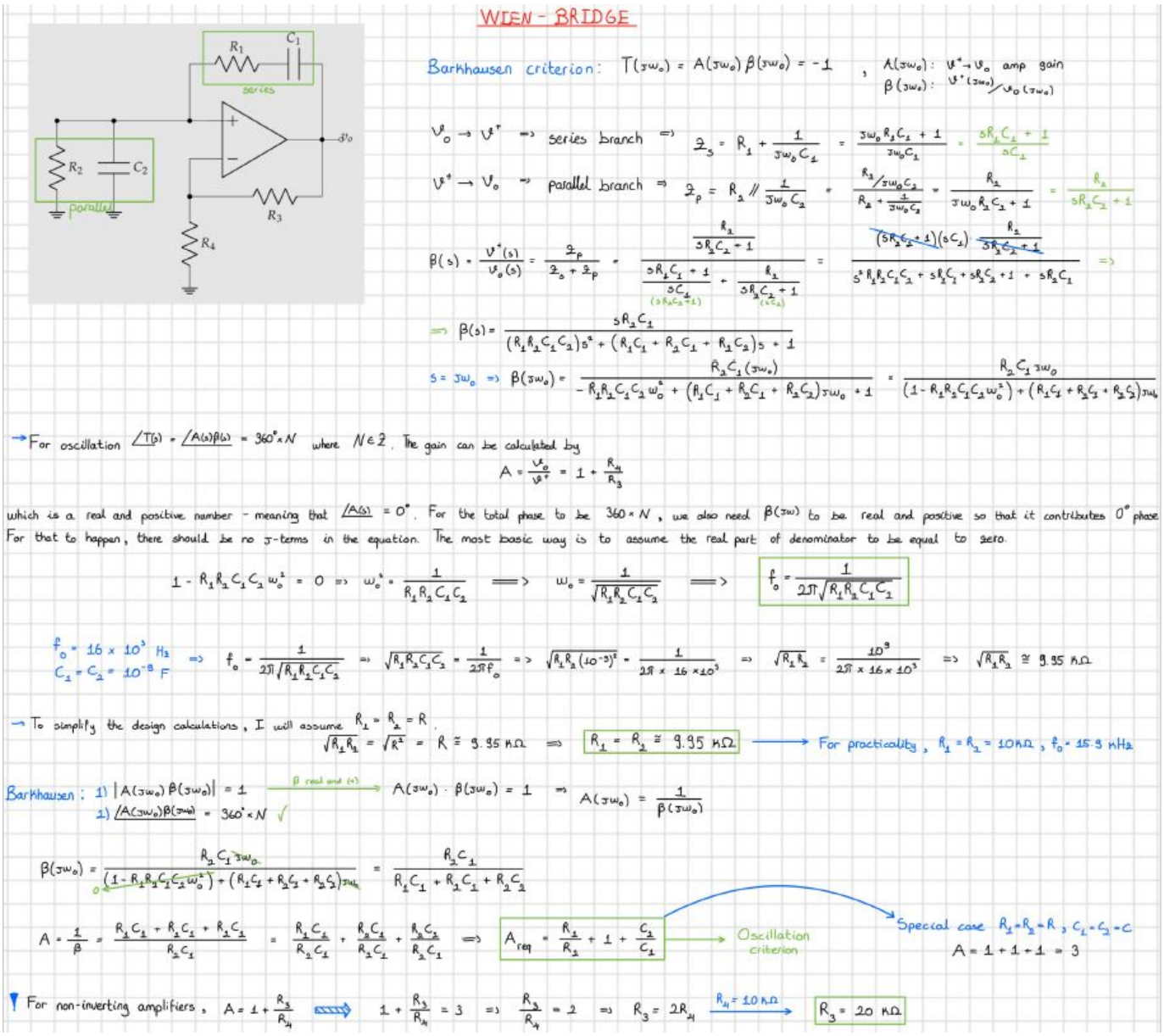

Figure 2: The calculations for part 1

Results

R_2 (kΩ)	Measured frequency (kHz)	Calculated frequency (kHz)	% Error
10	15.110	15.915	5.061
10.5	14.616	15.532	5.897
11	14.231	15.175	6.220
11.5	13.861	14.841	6.605
12	13.508	14.529	7.026
12.5	13.172	14.235	7.469
13	12.853	13.959	7.922
13.5	12.550	13.698	8.380
14	12.262	13.451	8.840
14.5	11.989	13.217	9.292
15	11.728	12.995	9.750

Table 1: The comparison and error rates for each chosen R_2 value

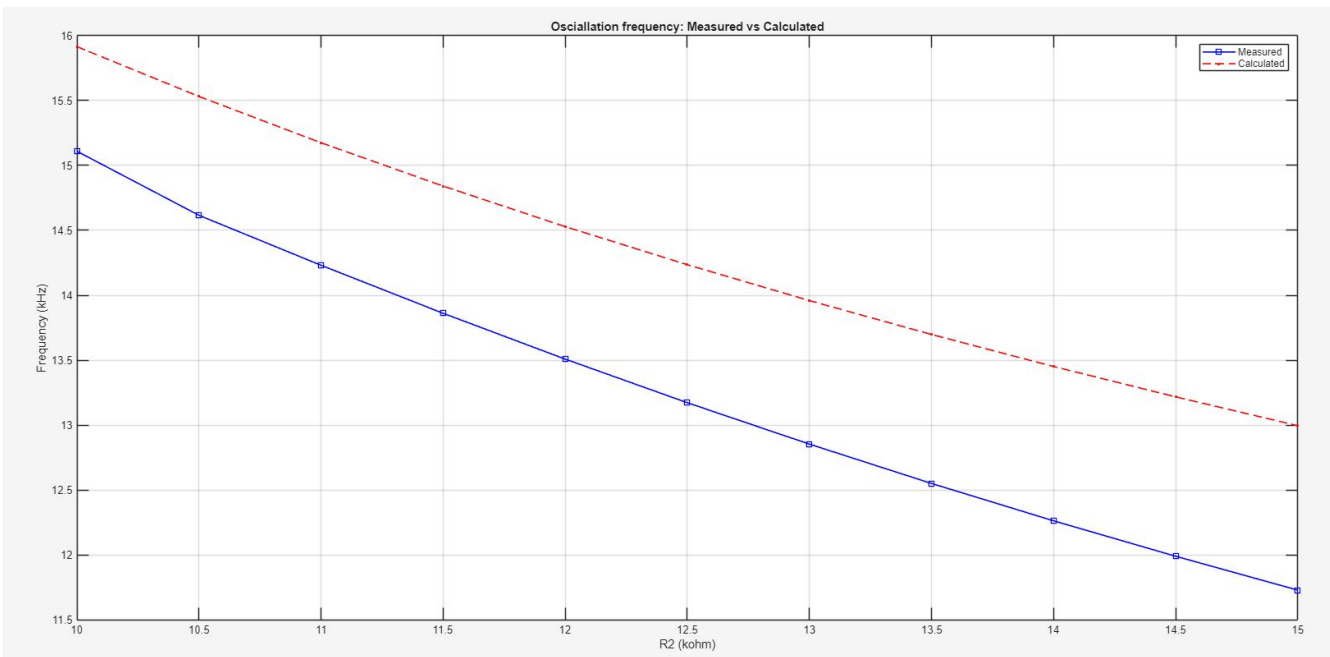

Figure 3: The comparison between measured and calculated frequency values

Commentary:

The oscillation frequency decreases monotonically as R_2 increases, which supports the theoretical knowledge of the relationship between oscillation frequency f_0 and resistance, i.e.:

$$f_0 \propto \frac{1}{\sqrt{R_2}}$$

Table 1 shows that the error rate between the measured and calculated frequencies varies between 5% and 10%. This is due to the formula being derived under ideal conditions and components, while the simulation uses non-ideal components and problems like clipping and phase lags can still be faced with. Therefore, while the frequency trend for measured and calculated frequencies is almost identical, the difference between these values reflects the effect of ideal or non-ideal conditions.

PART II – SCHMITT TRIGGER OSCILLATOR

Objective

Designing a Schmitt Trigger oscillator circuit that satisfies the given conditions, expressing period in terms of time constant and voltages, simulating the circuit and plotting the asked values.

Method

The circuit's oscillation process was examined to plan the steps needed to be completed for the question. The relationship between node voltages v_n and v_p and the threshold voltages $\pm V_T$ was found and then used to find the value of V_T and R_3.

By using the general equation for voltage at any chosen time given the initial and final voltage values, the oscillation period for v_n was found in terms of time constant τ and threshold voltage V_T. By inserting the given and previously calculated values into the equation, the resistance value of R_1 was found.

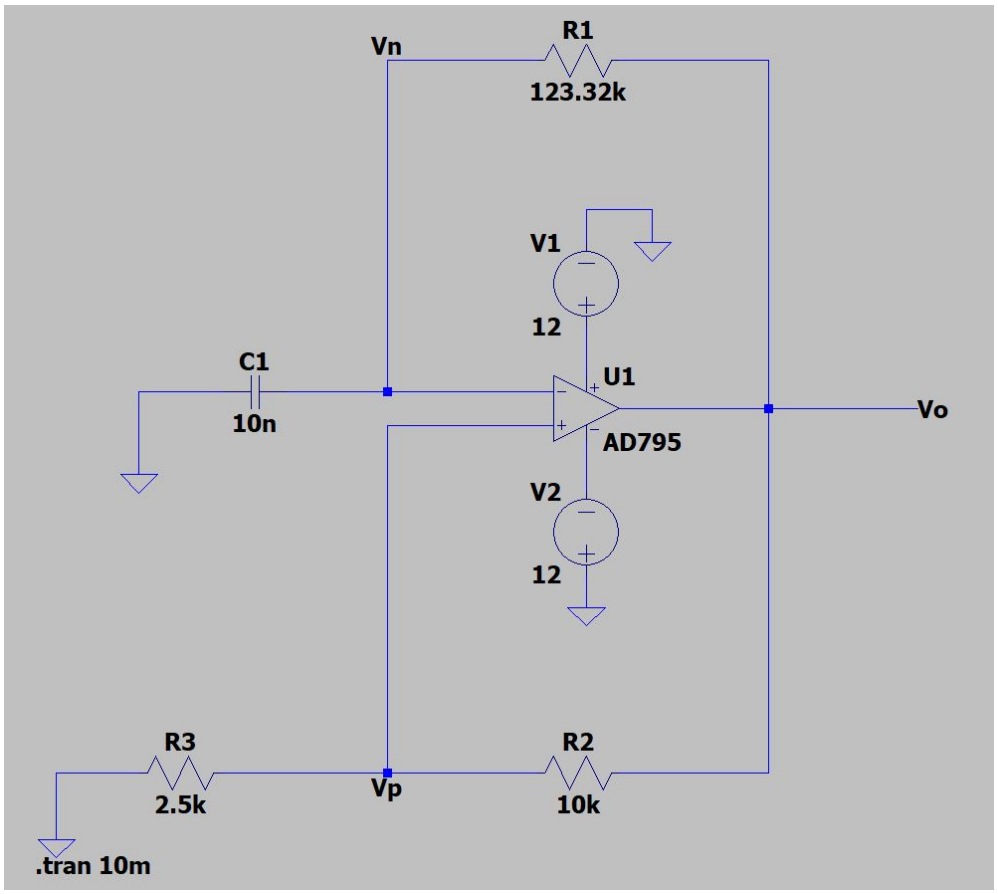

Figure 4: The schematic used for part 2

The schematic in Figure 4 was drawn, and the simulation was run to find the plots asked in the question.

Calculations

SCHMITT TRIGGER

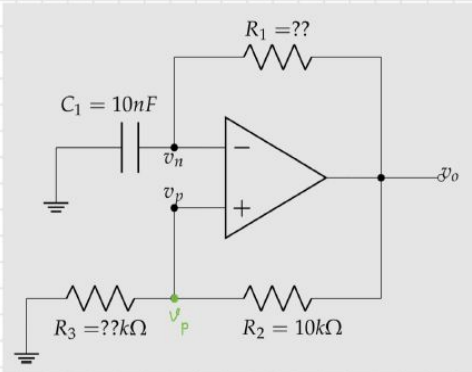

→ v_n ramps until it reaches the switching threshold value set by v_p. So, the min-max values of v_n where the switching happens are the two thresholds at v_p – meaning that peak-to-peak amplitude of v_n is equal to the difference between the thresholds.

$$v_p = \frac{R_3}{R_2 + R_3} \cdot v_o \xrightarrow{v_o = \mp 10} v_p = \frac{R_3}{R_2 + R_3} \cdot (\pm 10) \Rightarrow \mp V_T = \mp \frac{R_3}{R_2 + R_3} \cdot 10$$

switching thresholds

$$v_{n,p-p} = V_T - (-V_T) = 2V_T \xrightarrow{V_{n,p-p} = 4} 2V_T = 4 \Rightarrow V_T = 2V$$

$V_T = 2V$, $R_2 = 10k\Omega$

$$\Rightarrow \cancel{2} = \frac{R_3}{10 + R_3} \cdot \overset{5}{\cancel{10}} \Rightarrow 5R_3 = 10 + R_3 \Rightarrow \boxed{R_3 = 2.5\ k\Omega}$$

→ The general equation for voltage across the capacitor: $v_n(t) = V_{final} + (v_n(0) - V_{final})e^{-t/\tau}$ where $\tau = R_1 C_1$. If we assume that v_o just switched to $+10V$ at that switching moment $v_n(0) = -V_T$. In $T/2$, capacitor charges toward $+10V$ – meaning that $v_n(\frac{T}{2}) = +V_T$.

$$t = T/2 \Rightarrow v_n(T/2) = V_{final} + (v_n(0) - V_{final})e^{-\frac{T}{2\tau}}$$

$$V_T = 10 + (-V_T - 10)e^{-\frac{T}{2\tau}}$$

$$V_T - 10 = -(V_T + 10)e^{-\frac{T}{2\tau}}$$

$$e^{-\frac{T}{2\tau}} = \frac{10 - V_T}{10 + V_T} \Rightarrow -\frac{T}{2\tau} = \ln\left(\frac{10 - V_T}{10 + V_T}\right) \Rightarrow \frac{T}{2\tau} = \ln\left(\frac{10 + V_T}{10 - V_T}\right) \xrightarrow{\tau = R_1 C_1} \boxed{T = 2R_1 C_1 \ln\left(\frac{10 + V_T}{10 - V_T}\right)}$$

$f = 1\ kHz \Rightarrow T = 1\ ms$, $V_T = 2V$, $C_1 = 10\ nF$

$$\Rightarrow 10^{-3} = 2R_1(10 \times 10^{-3}) \ln\left(\frac{10+2}{10-2}\right) \Rightarrow R_1 = \frac{10^{-3}}{2 \times 10 \times 10^{-3} \times \ln\left(\frac{12}{8}\right)} \Longrightarrow \boxed{R_1 \cong 123.32\ k\Omega}$$

Figure 5: The calculations for part 2

Results

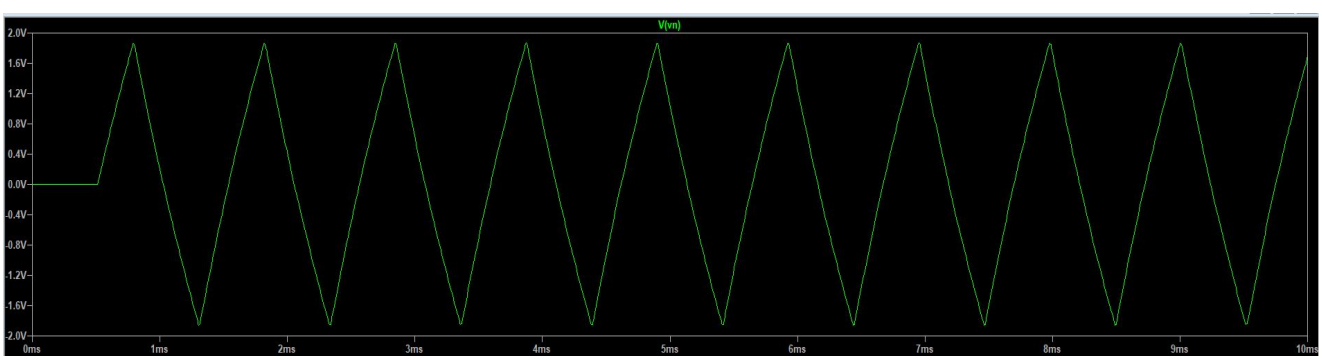

Figure 6: The plot for node voltage v_n

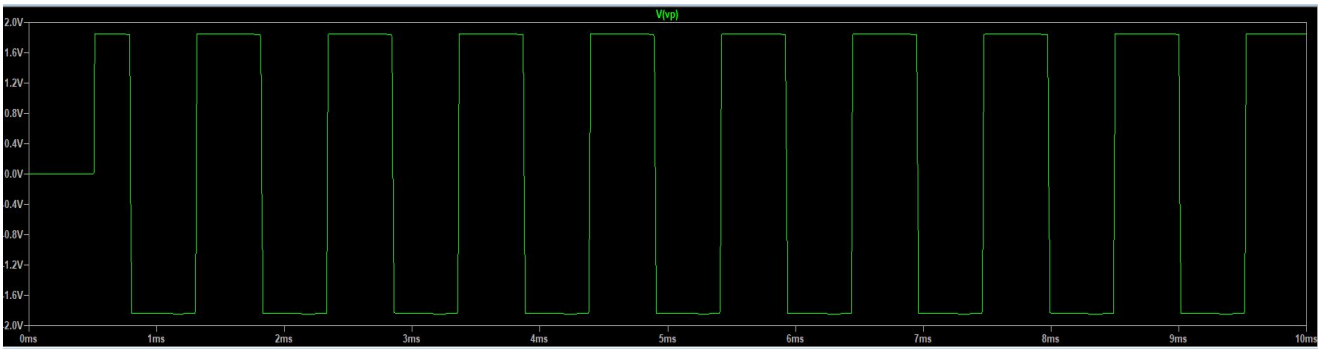

Figure 7: The plot for node voltage v_p

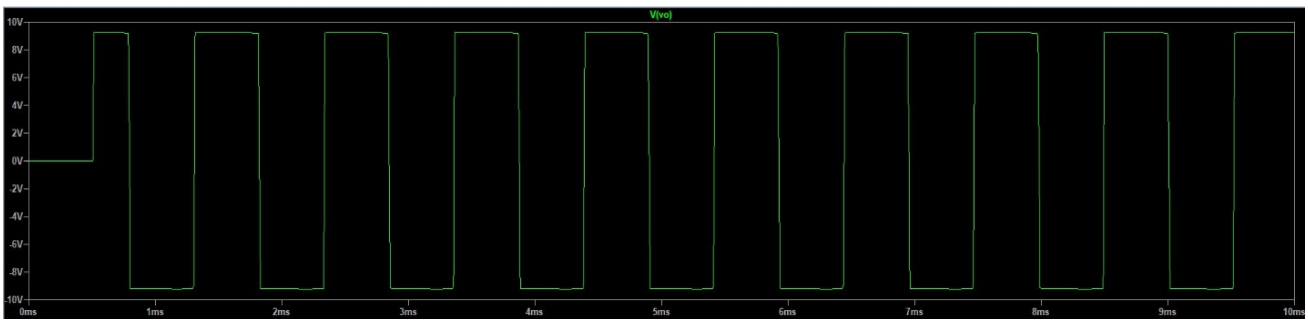

Figure 8: The plot for output voltage v_o

Commentary:

The Schmitt trigger oscillator circuit is not meant to produce a sine wave. It is a switching-type oscillator, so the output $v_o$becomes a square wave by jumping between a high voltage and a low voltage. The node $v_p$is made by the R_2–R_3 divider, so it creates two fixed “limit” levels (one positive, one negative) called “threshold voltage” that tells the amplifier when to switch. The capacitor voltage $v_n$slowly charges and discharges through R_1, so it looks like a curved ramp. The oscillation happens because $v_n$keeps moving until it reaches the limit set by v_p; when it reaches that limit, the op-amp switches, the limit changes sign, and the capacitor starts moving the other way. In short: square wave at the output, ramp at the capacitor. The size of the ramp is set by $R_2$and R_3, and the speed (frequency) is mainly set by R_1C_1. Small differences from calculations can happen because the op-amp in simulation is not perfect and does not hit the exact voltages assumed in theory.